Dimmable AMI Series LED Driver

AMI-15W350-A8B2-I05

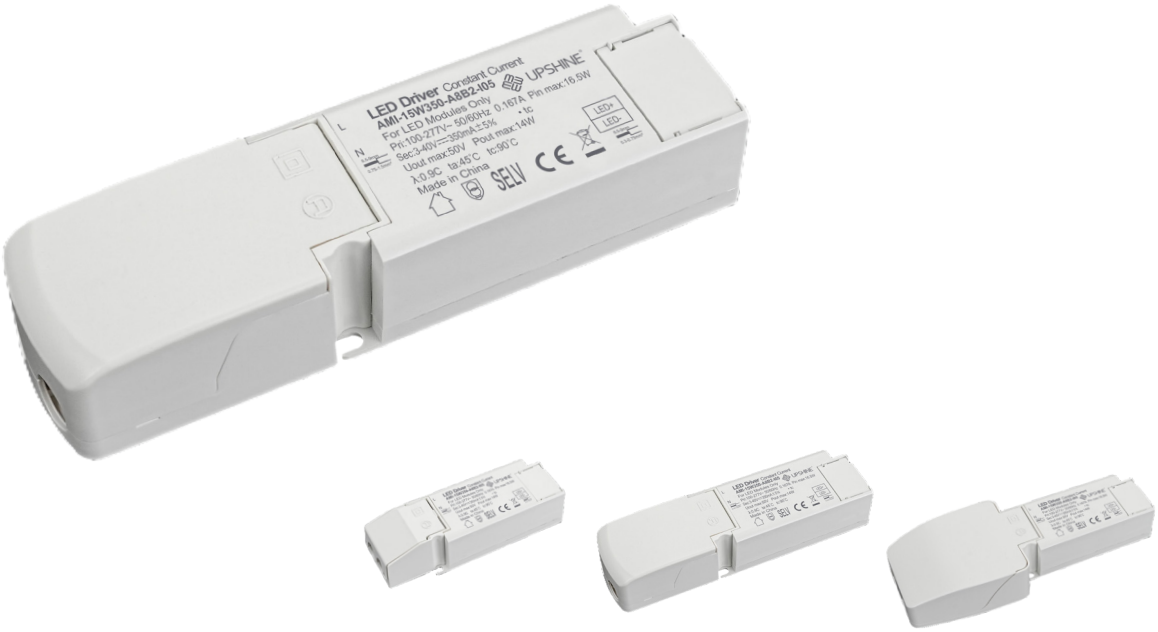

Product description

This is an external smart driver which adopts Silvair Bluetooth smart technology. It can control on/off, and brightness. Silvair is an advanced lighting control solution based on Bluetooth Low Energy (BLE). The luminaire can be easily implemented in the lighting control system or existing lighting scenes. Creating an optimal solution in terms of ease of installation and functionality with minimal additional hardware and deployment costs.

Features

- Connect equipment via Silvair App which downloaded from IOS App Store
- Brightness memory function
- External driver, high PF and low THD
- Wattage changeable by DIP switch
- Dimming depth from 1% to 100%
- Nominal life-time up to 50,000h
- Wide range input and output voltage, minimum voltage 3V
- Suitable for class II luminaire

CE SELV RoHS

Application

It is widely used for all kinds of lighting fixtures, including led downlight, led panel light, led ceiling light and etc.

A M I-15W 350- A8 B 2- I05

- A M I — Product series
- M — Multiple
- I — Isolated
- 15W — Wattage
- 350 — Output current
- A8 — Adjustable wattage
- B — Bluetooth(B)
- 2 — Dimmable
- I05 — Silvair

UPSHINE
Add: 2nd building Dingfeng High-Tech Zone, Fuyuan 1st road, Fuyong Sub-district, Bao'an, Shenzhen China
www.upshine.com info@upshine.com Tel: +86-755-2919 7332

Specification

Model		AMI-15W350-A8B2-I05
Function		Bluetooth, dimmable
Input	Input Power(W)	15W Max
	Input Voltage(V)	AC90-305V
	Rated Input Voltage(V)	AC100-277V
	DC Input Voltage(V)	DC176-280V
	Frequency(Hz)	50/60Hz
	Input Current(A)	≤0.19A
	Rated Input Current(A)	≤0.167A
	Power Factor(typ)	0.9C
	Total harmonic distortion(%)	<10% @230V
	Efficiency(typ)	85%%
	Inrush current(Typ.)	14A/87uS
	Leakage current(mA)	<0.7mA@AC230V
	No load wattage(W)	<0.5W@AC230V
Output	Output Voltage range(V)	DC3-40V
	Rated output current	100-350mA
	Line Regulation(%)	±5%
	Open circuit voltage(max)	50V
	Setup time(note1)	<3S@230V
	Flickering Index(IEEEStd 1789)	<5%(LOW Risk)
	IEC-PST/CIE(SVM)	≤1/≤0.4
Protection	Short circuit protection	PASS
	Over voltage protection	PASS
	Over temperature protection	PASS
Environment	Maximum case temperature tc	90°C
	Operating temperature	-20°C…+45°C
	Storage temperature/humidity	-25°C…+85°C; 5-95% RH
	Relative humidity	5…85%
	Environmental rating	Indoor
	IP rating	IP20
	Life time	>50,000H @25°C
SAFFTY & EMC	Safety standards	BS EN/EN61347-1, BS EN/EN61347-2-13 independent, BS EN/EN62384 UL8750(type"HL"), CSA C22.2 No.250.13-12
	Withstand voltage	I/P-O/P:3.75KVAC
	Isolation Resistance	I/P-FG: 500VDC, ≥4M Ω
	surge	IEC/EN61000-4-5(L-N:1.5KV)
	Ring Wave	ANSI/IEEE C62.41.2-2002(L-N:2.5KV)
	EMC EMISSION	BS EN/EN55015, BS EN/EN61000-3-2 Class C ; BS EN/EN61000-3-3;FCC-PART15
	EMC IMMUNITY	BS EN/EN61000-4-2,3,4,5,6,8,11; BS EN/EN61547;FCC-PART15
	EL	-
Other	Dimension	Refer to the specification sheet
	Weight	Refer to the specification sheet

Output voltage **VS** Output current

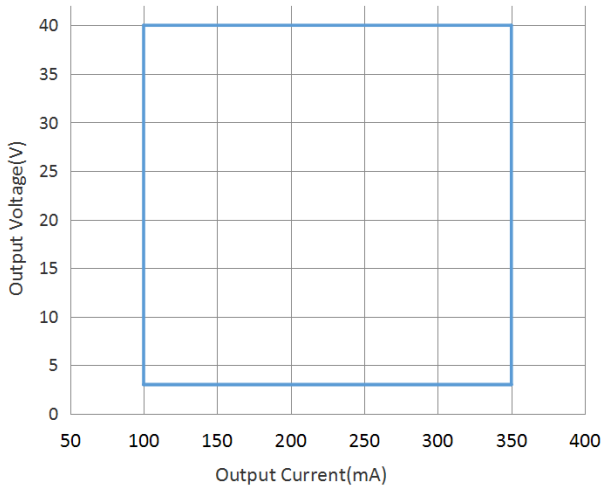

Efficency **VS** Output voltage

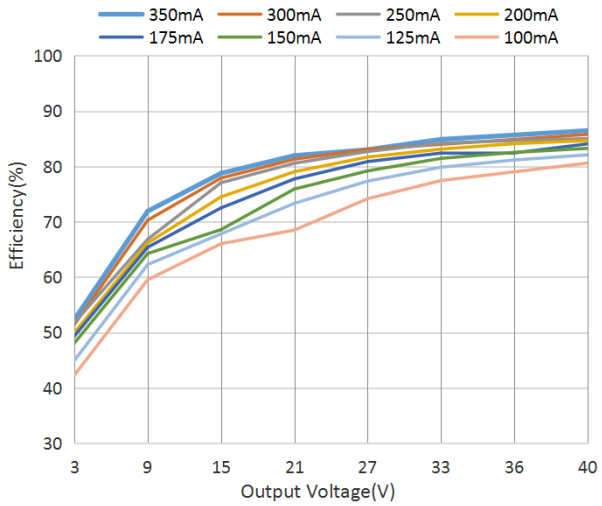

PF **VS** Output Power Ratio

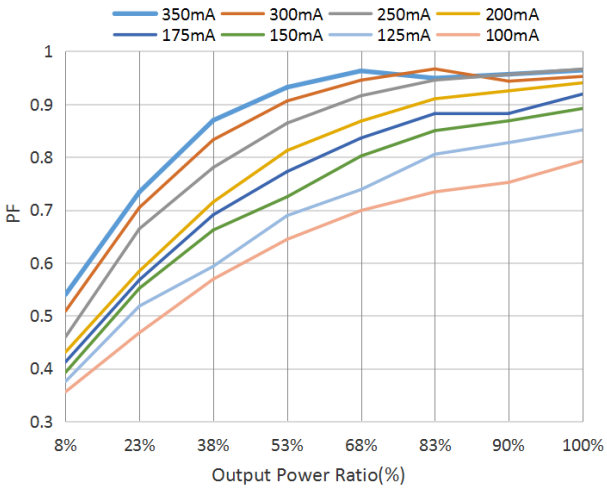

THD **VS** Output Power Ratio

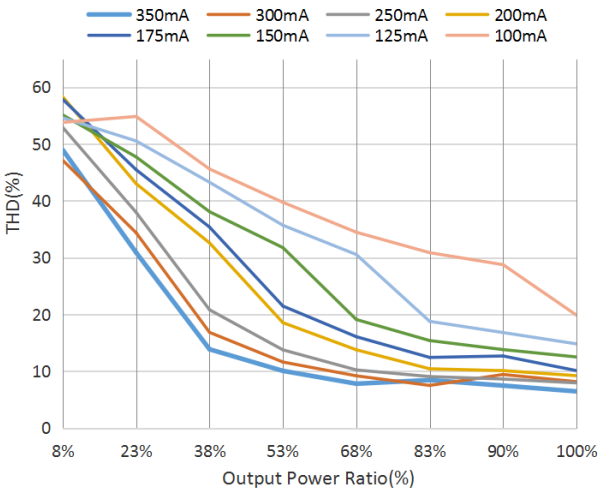

Lifetime **VS** Case Temperature

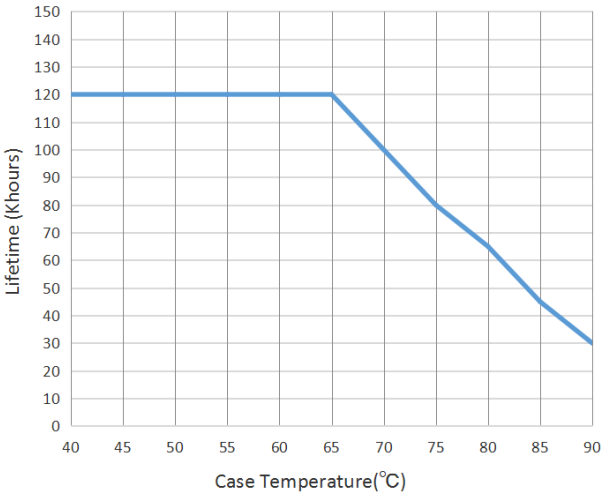

DIP SWITCH TABLE

AMI-15W350-A8B2-I05

Vout	Po Max	Io	1	2	3
3-40V	14W	350mA	ON	ON	ON
3-40V	12W	300mA	OFF	ON	ON
3-40V	10W	250mA	ON	OFF	ON
3-40V	8W	200mA	OFF	OFF	ON
3-40V	7W	175mA	ON	ON	OFF
3-40V	6W	150mA	OFF	ON	OFF
3-40V	5W	125mA	ON	OFF	OFF
3-40V	4W	100mA	OFF	OFF	OFF

Mechanical specification

Terminal: S

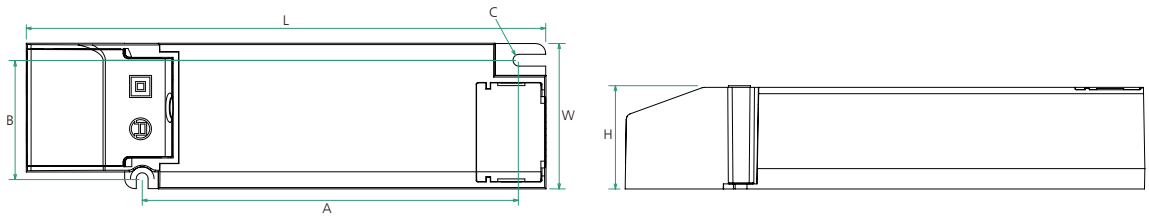

Code	Dimension(mm)						Product Weight(Kg)		Package Weight(Kg)		Carton Size(cm)	Qty/CTN
	L	W	H	A	B	C	N.W/PC	G.W/PC	N.W/CTN	G.W/CTN		
AMI-15W350-A8B2-I05	126.5	43	30.5	90	35	4	0.11	0.13	6.24	6.55	28*22*23.5	48

Terminal: M

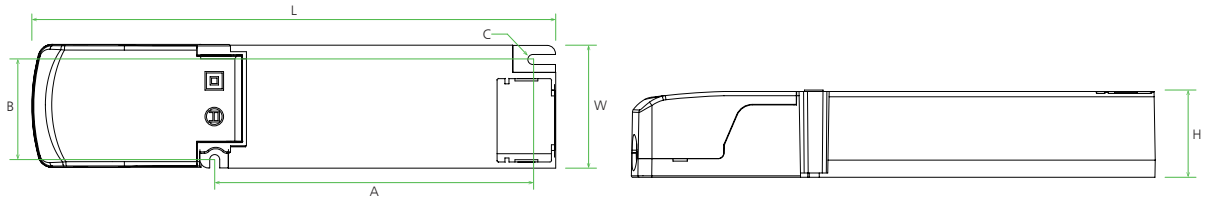

Code	Dimension(mm)						Product Weight(Kg)		Package Weight(Kg)		Carton Size(cm)	Qty/CTN
	L	W	H	A	B	C	N.W/PC	G.W/PC	N.W/CTN	G.W/CTN		
AMI-15W350-A8B2-I05	156.4	43	30.5	90	35	4	0.13	0.16	7.68	8.08	34.5*22*23.5	48

Terminal: L3

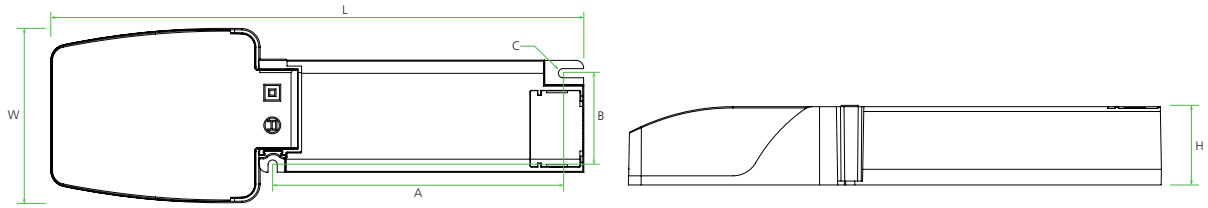

Code	Dimension(mm)						Product Weight(Kg)		Package Weight(Kg)		Carton Size(cm)	Qty/CTN
	L	W	H	A	B	C	N.W/PC	G.W/PC	N.W/CTN	G.W/CTN		
AMI-15W350-A8B2-I05	180	66.7	30.5	90	35	4	0.15	0.18	8.64	9.05	39*30*23.5	48

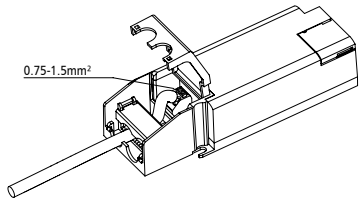

Terminal: S

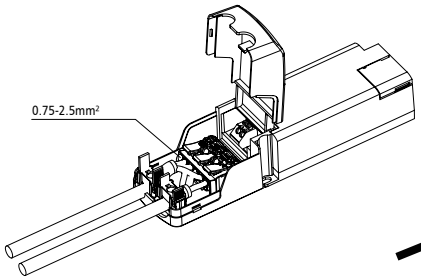

Terminal: M

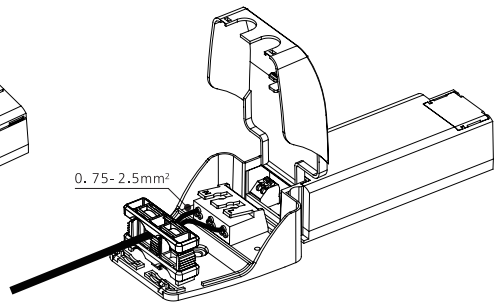

Terminal: L3

Wiring Diagram

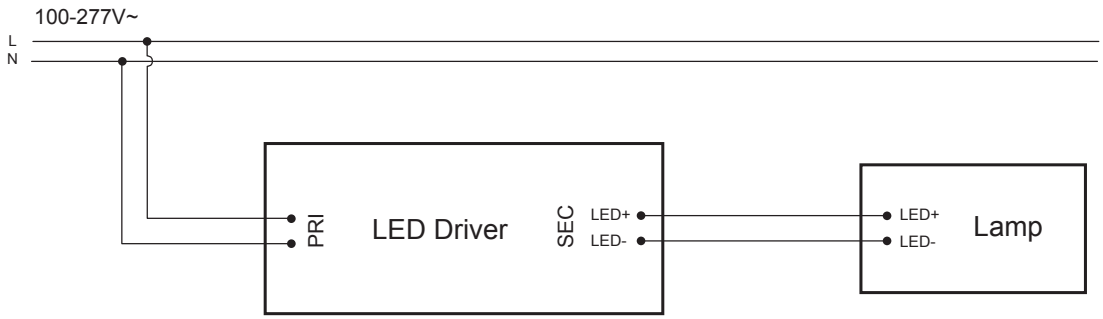

MCB Information

Product Specification					Circuit Breaker Specification							
Model	Inrush current(A)	Inrush time	Rated Voltage (AC/V)	Input current (A)	B10	B13	B16	B20	C10	C13	C16	C20
					10	13	16	20	10	13	16	20
AMI-15W350-A8B2-I05	4.5	65	100-277V	0.167	39	51	63	79	39	51	63	79

Resetting:

With power on condition, use a magnet to approach the reset icon attachment on the side of the power supply for 3 seconds. When led lighting fixture will flicker three times, reset successful.

NOTE:

1. All parameters NOT specially mentioned are measured at 230VAC input, rated current and 25°C of ambient temperature.
2. Ripple & noise are measured at 20MHz of bandwidth by using a 12" twisted pair-wire terminated with a 0.1uf & 47uf parallel capacitor
3. Tolerance : includes set up tolerance, line regulation and load regulation.
4. De-rating may be needed under low input voltages.
5. Length of set up time is measured at first cold start. Turning ON/OFF the driver may lead to increase of the set up time.
6. The driver is considered as a component that will be operated in combination with final equipment. Since EMC performance will be affected by the complete installation, the final equipment manufacturers must re-qualify EMC Directive on the complete installation again.
7. To fulfill requirements of the latest ErP regulation for lighting fixtures , this LED driver can only be used behind a switch without permanently connected to the mains
8. For any application note and IP waterproof function installation caution, please refer our user manual before using.
9. It is recommended that customer should install protection devices for surge, for over voltage and for under voltage to ensure safety before connecting to electricity.
10. As an accessory, the LED driver is not the only factor determining the EMC performance of the LED luminaire.The structure and the wiring of the light fixture are also relevant. Thus it's strongly recommended the LED light fixture manufacturer re-confirms the EMC of the whole LED light fixture.
11. The total output power of the light fixture should NOT exceed the maximum rated output power of the driver.
12. We are not allowed to cover the LED driver