English Edition

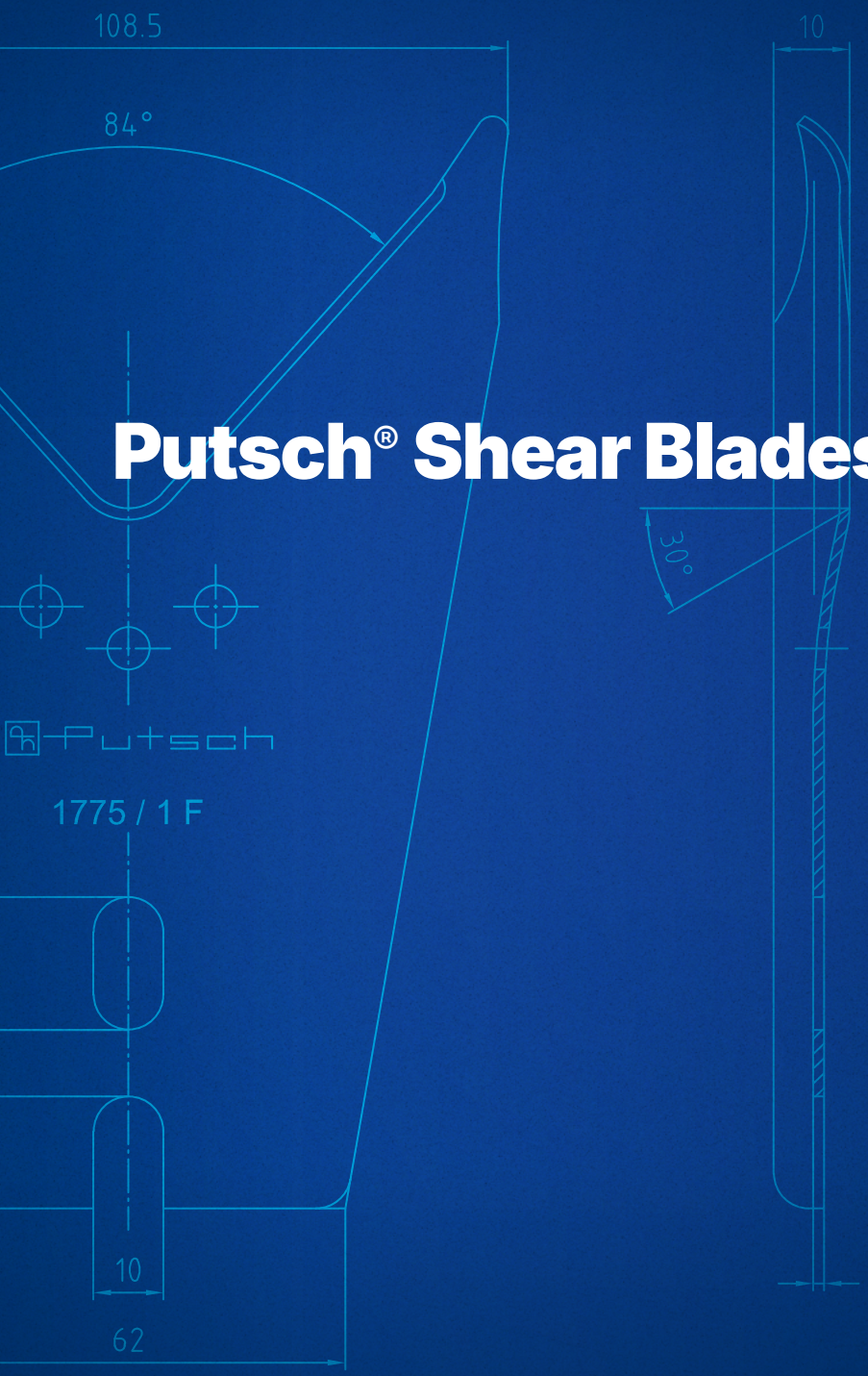

Putsch® Shear Blades

Excellence in Technology.
A Shear Blade for Every Glass Application. Worldwide!

The Putsch® Group

Made in Germany, since 1871.



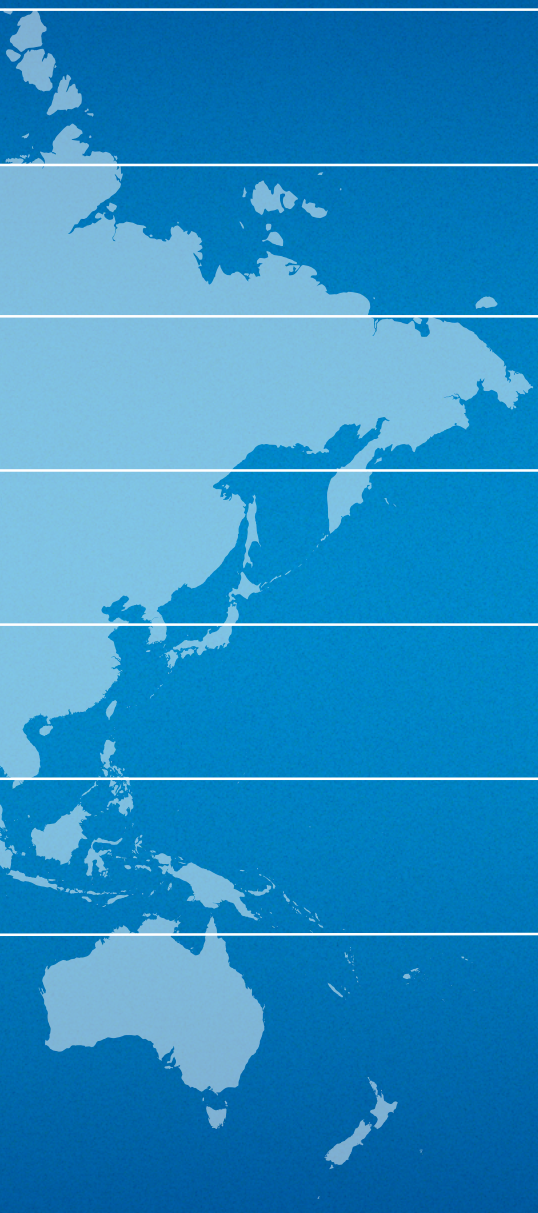

Putsch® & Company, Inc.
Asheville NC, USA.

Stord® International A.S.
Bergen, Norway.

Putsch® Stord s.r.o.
Nové Město na Moravě, Czechia.

Putsch® Teknoloji Ltd. Şti.
Istanbul, Turkey.

Putsch® Meniconi S.p.A.
Poggibonsi, Italy.

Putsch® GmbH & Co. KG
Headquarters in Hagen, Germany.

Putsch® Nerva S.A.
Valladolid, Spain.

Founded in 1871, Putsch® has played an essential role across the container, crystal, press, special, and technical glass industries.

Benefits of Putsch® Shear Blades

Key Advantages.

Putsch® shear blades are designed to optimize the glass production process.

With the correct Putsch® shear blades you can achieve the following advantages, optimize your production process and effectively decrease your Cost per Cut.

- Reduction of shear marks enabled by a special relief grind.
- Extended lifetime and low wear thanks to our special steel and surface treatment, significantly reducing down time.
- Resharp up to 4 times.
- Fast and easy reproducibility during shear adjustment thanks to high parrallelism and consistent blade height.
- Consistent gob formation facilitated by precision cutting edges.
- High durability when processing specialty glass compositions.
- Customized shear blades for individual production needs including various designs, cutting angles, and material thicknesses.
- Reduced coolant consumption due to our signature surface finish.
- Technical support through our international sales network, including on-site assistance.
- Reliable production planning through consistent high quality and on-time delivery.
- Over 100 years of expertise in shear blade manufacturing.


Made in Germany
1775/1-12.2
0225380

V-Blade Type 1775

Suitable for Container Glass Applications.



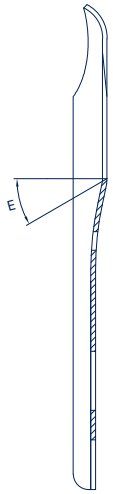

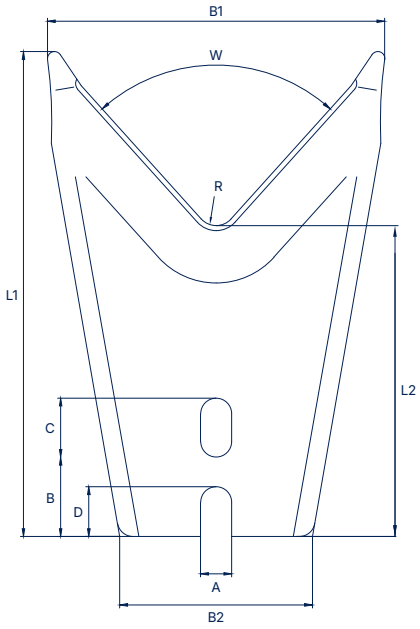

Type[1]	SM 1775 F	SM 1775 S
Gob ø max. Gob	65 mm single, double	65mm single, double
W B1 B2 L1 L2 A B C D R	84° 109 mm 62 mm 156 mm 100 mm 10 mm 25,5 mm 19 mm 16 mm 6,5 mm	84° 109 mm 62 mm 156 mm 100 mm 10 mm 25,5 mm 19 mm 16 mm 6,5 mm
Blade Angle E	30° 45° 30°/60°	r = 2,5 mm

1: The designations **F** and **S** are used throughout this catalog and refer to the cutting-edge grind. F stands for flat-grind (straight grind), while S stands for special-grind (radius grind).

V-Blade Type 5230

Suitable for Container Glass Applications.



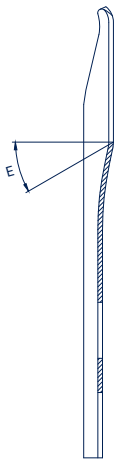

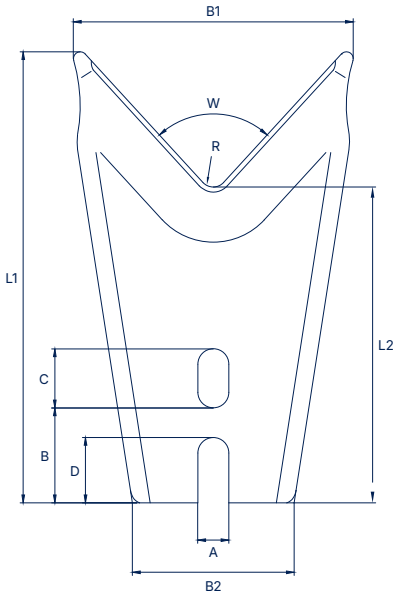

Type	SM 5230 F	SM 5230 S
Gob ø max. Gob	55 mm double, triple	55 mm double, triple
W B1 B2 L1 L2 A B C D R	85° 90 mm 52 mm 145 mm 101 mm 10 mm 30,5 mm 19 mm 21 mm 5 mm	85° 90 mm 52 mm 145 mm 101 mm 10 mm 30,5 mm 19 mm 21 mm 5 mm
Blade Angle E	30° 30°/60°	r = 2,5

V-Blade Type 2316

Suitable for Container Glass Applications.



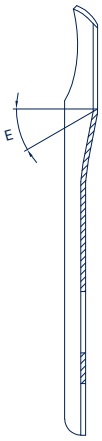

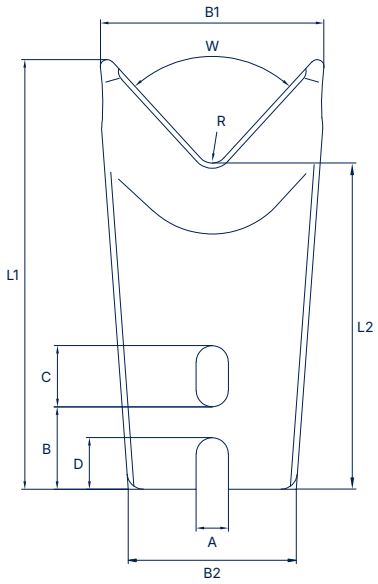

Type	SM 2316 F	SM 2316 S
Gob ø max. Gob	40 mm double, triple	40 mm double, triple
W B1 B2 L1 L2 A B C D R	85° 69 mm 52 mm 133 mm 101 mm 10 mm 25,5 mm 19 mm 16 mm 5 mm	85° 69 mm 52 mm 133 mm 101 mm 10 mm 25,5 mm 19 mm 16 mm 5 mm
Blade Angle E	30° 45° 30°/60°	r = 2,5

V-Blade Type 4031

Suitable for Container Glass Applications.



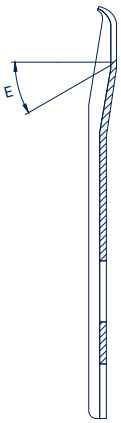

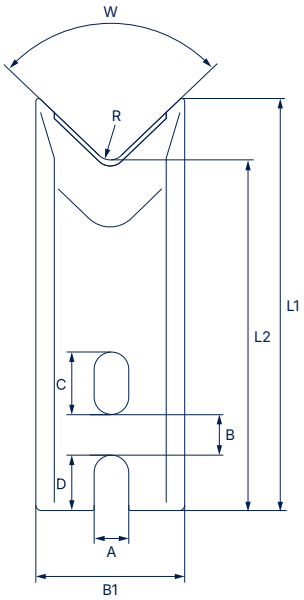

Type	SM 4031
Gob ø max.	25 mm
Gob	triple, quadruple
W	90°
B1	43 mm
B2	25,5 mm
L1	120 mm
L2	101 mm
A	10 mm
B	43 mm
C	18 mm
D	16 mm
R	5 mm
Blade Angle E	30°

CS-Line Type 1765

Suitable for Container Glass Applications.



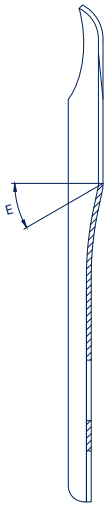

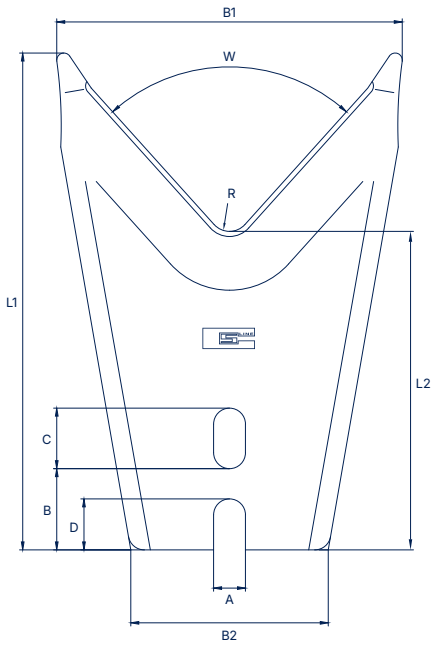

Type	SM 1765
Gob ø max. Gob	65 mm single, double
W B1 B2 L1 L2 A B C D R	84° 109 mm 62 mm 156 mm 100 mm 10 mm 25,5 mm 19 mm 16 mm 6,5 mm
Blade Angle E	30° 45° 30°/60° Special-grind r = 2,5

CS-Line Type 5220

Suitable for Container Glass Applications.



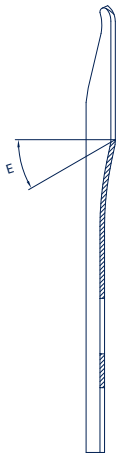

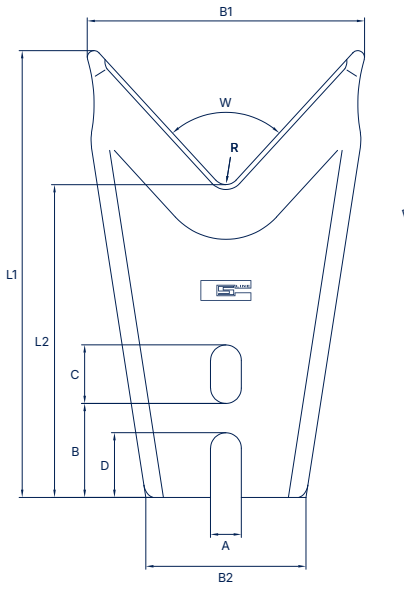

Type	SM 5220
Gob ø max. Gob	55 mm double, triple
W B1 B2 L1 L2 A B C D R	85° 90 mm 52 mm 145 mm 101 mm 10 mm 30,5 mm 19 mm 21 mm 5 mm
Blade Angle E	30° 45° 30°/60° Special-grind r = 2,5

CS-Line Type 2306

Suitable for Container Glass Applications.



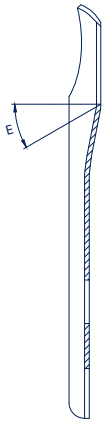

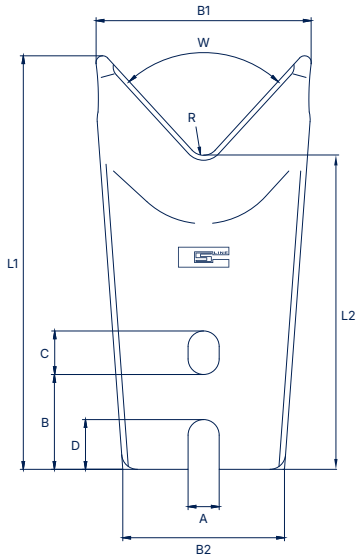

Type	SM 2306
Gob ø max. Gob	40 mm double, triple
W B1 B2 L1 L2 A B C D R	85° 69 mm 52 mm 133 mm 101 mm 10 mm 25,5 mm 19 mm 16 mm 6,5 mm
Blade Angle E	30° 45° 30°/60° Special-grind r = 2,5

Radius Blade Type 1765.R20

Suitable for Container Glass Applications.



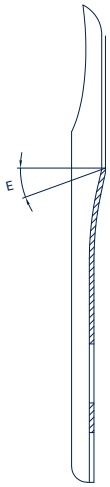

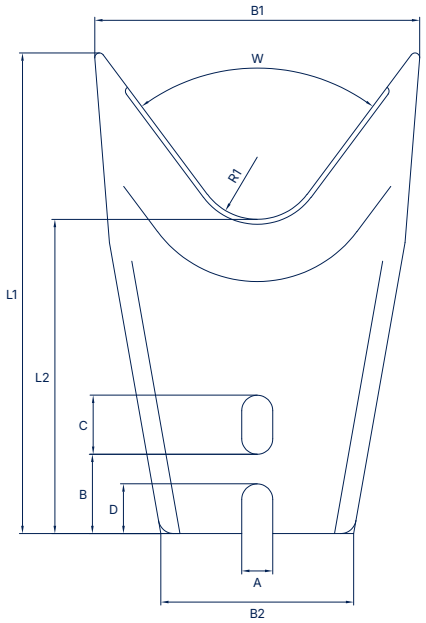

Type	SM 1765.R20
Gob ø max.	65 mm
Gob	single, double
W	73,5°
B1	104 mm
B2	62 mm
L1	154,5 mm
L2	101 mm
A	10 mm
B	25,5 mm
C	19 mm
D	16 mm
R	20 mm
Blade Angle E	30° 45° 30°/60° Special-grind r = 2,5

Radius Blade Type 1765.R22

Suitable for Container Glass Applications.



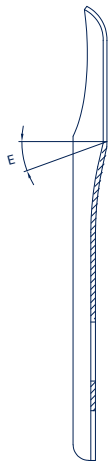

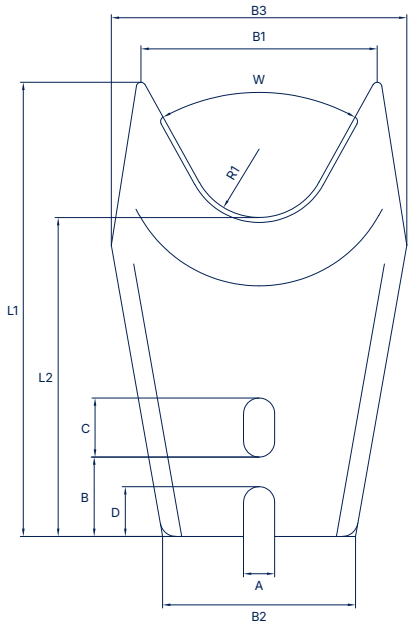

Type	SM 1765.R22
Gob ø max.	65mm
Gob	single, double
W	58°
B1	73 mm
B2	62 mm
B3	95 mm
L1	146 mm
L2	102,5 mm
A	10 mm
B	22,5 mm
C	19 mm
D	16 mm
R	22 mm
Blade Angle E	30° 45° 30°/60° Special-grind r = 2,5

Radius Blade Type 2306.R20

Suitable for Container Glass Applications.



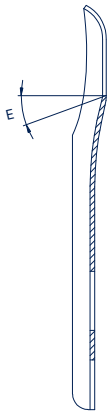

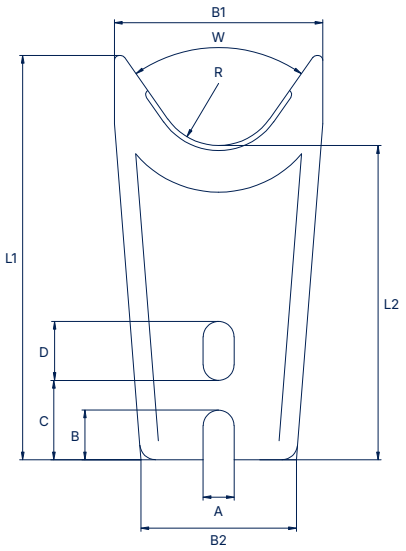

Type	SM 2306.R20
Gob ø max.	40 mm
Gob	double, triple
W	70°
B1	67 mm
B2	50 mm
L1	130mm
L2	101 mm
A	10 mm
B	16 mm
C	25,5 mm
D	19 mm
R	30 mm
Blade Angle E	30° 45° 30°/60° Special-grind r = 2,5

V-Blade Special Type 3167

Suitable for Tableware and Container Glass Applications.



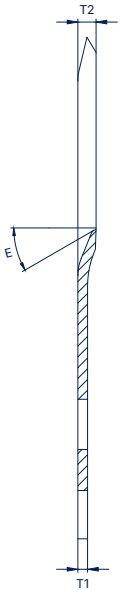

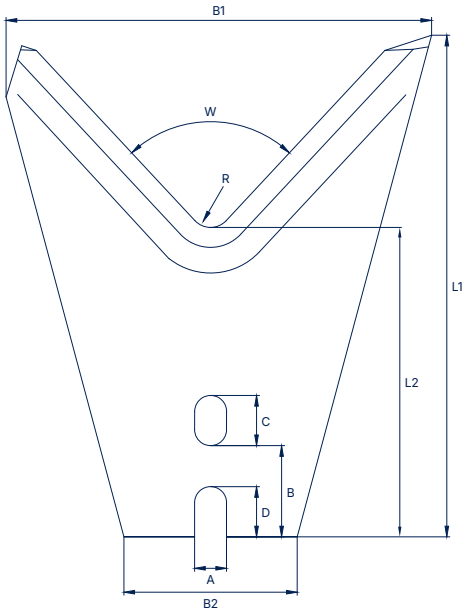

Type	3617 / 1
Gob ø max.	80 mm
Gob	single
W	86°
B1	140 mm
B2	57 mm
L1	165 mm
L2	102 mm
A	10,5 mm
B	30 mm
C	16,5 mm
D	16,5 mm
R	7 mm
T1	3,3 mm
T2	6 mm
Blade Angle E	Special-grind approx. 30°

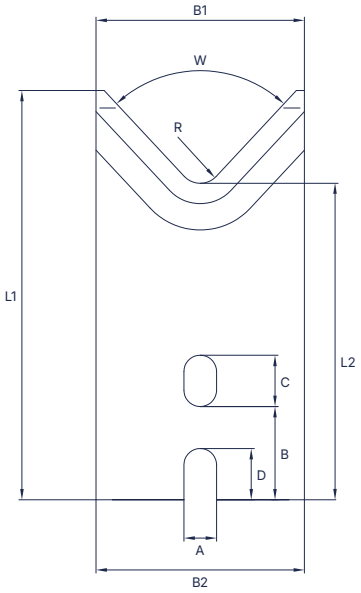

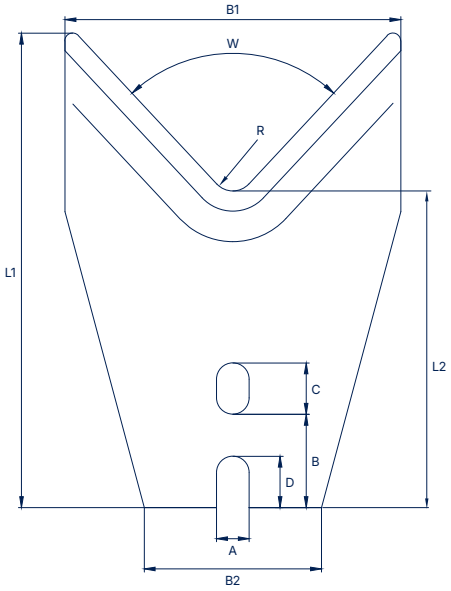

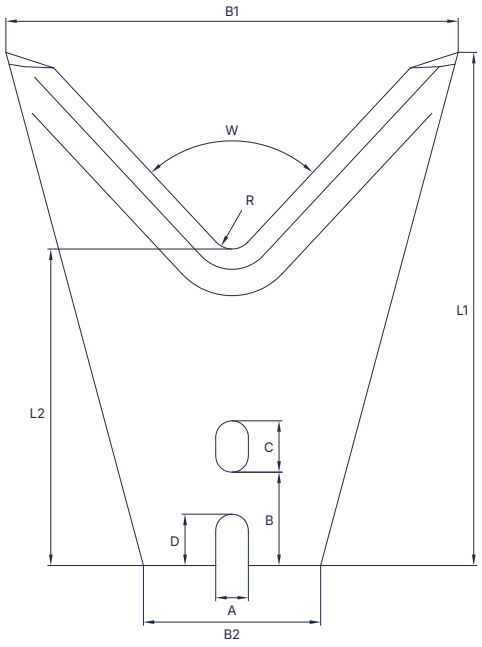

3617 / 5	3617 / 6	3617 / 7
45 mm double, triple	70 mm single, double	80 mm single
86° 67 mm 67 mm 132 mm 102 mm 10,5 mm 30 mm 16,5 mm 16,5 mm 7 mm 3,3 mm 6 mm	86° 108 mm 57 mm 152,6 mm 102 mm 10,5 mm 30 mm 16,5 mm 16,5 mm 7 mm 3,3 mm 6 mm	86° 145 mm 57 mm 165 mm 102 mm 10,5 mm 30 mm 16,5 mm 16,5 mm 7 mm 3,3 mm 6 mm
Special-grind approx. 30°	Special-grind approx. 30°	Special-grind approx. 30°

Specialty Type Shear Blades

Available for Nearly All Blade Types – Contact Us for Details.



3 Holes



5 Holes



Slots



V-Slots



Black Edition

Custom Designs and Special Editions

Individual Consultation and Custom Manufacturing.

Our Putsch® customer service starts with personalized consultation. Our experienced specialists provide comprehensive guidance on the various options available to optimize your production processes and assist you in selecting and configuring the appropriate system components and settings.

If our standard shear blades do not fully meet your specific requirements, we are also pleased to design and manufacture custom-made blades as well as small production batches. Working closely with you, our engineers develop the optimal blade design based on your individual specifications and operational needs.

Specific requirements, such as coolant distribution and heat dissipation across the blade surface, can be individually considered and optimized to achieve the best possible performance.

By inspecting used shear blades, our experts can determine whether:

- the correct pressure is being applied to the blades,
- the blades are aligned parallel to one another,
- the glass melt contains any impurities,
- the cutting system is being cooled properly.

Upon request, we will be happy to advise and assist you in configuring the optimal settings for your production!

U-Blade Type 3533

Suitable for Tableware and Specialty Glass Applications.



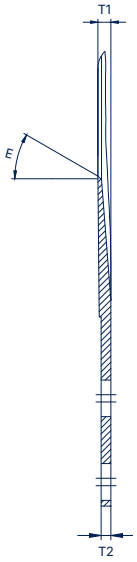

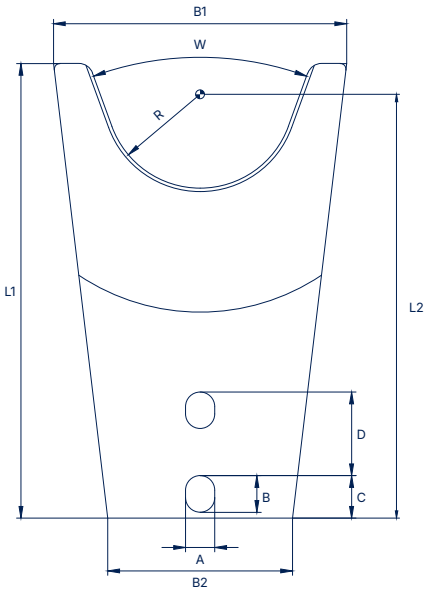

Type	SM 3533
Gob ø max.	75 mm
Gob	single
W	40°
B1	100 mm
B2	63 mm
L1	155 mm
L2	144,5 mm
A	10 mm
B	12,5 mm
C	14,5 mm
D	28,5 mm
R	35 mm
T1	4,5 mm
T2	3,3 mm
Blade Angle E	45°

Please note: All of our U-Blades are available with various radii. The dimensions specified, as well as the maximum gob diameter, depend on the selected radius. Custom mounting configurations can be manufactured upon request.

U-Blade Type 3299

Suitable for Tableware and Specialty Glass Applications.



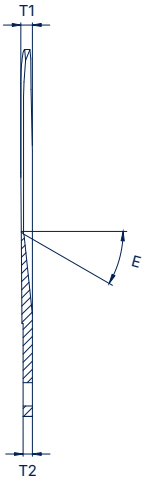

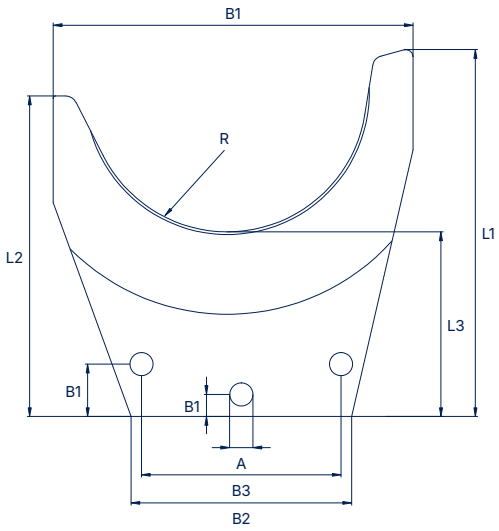

Type[1]	SM 3299
Gob ø max.	120 mm
Gob	single
B1	155 mm
B2	95 mm
B3	86 mm
L1	138 mm
L2	80 mm
L3	158 mm
A	10 mm
C	9,5 mm
D	22,5 mm
R	60 mm
T1	5 mm
T2	4 mm
Blade Angle E	45°

1: Available in symmetrical and asymmetrical versions.

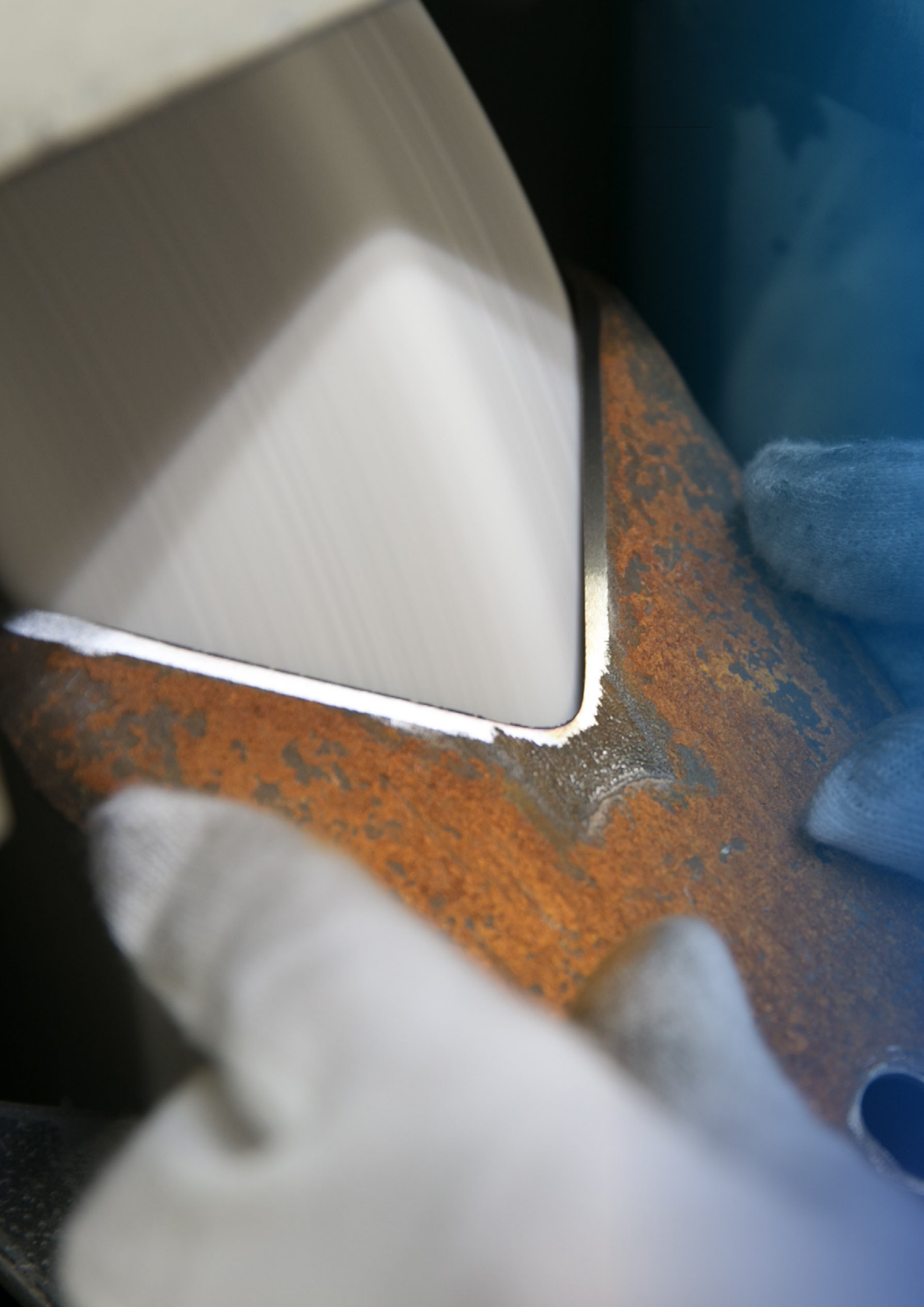

Putsch® Resharp Service

Economical and Sustainable.

Putsch® Resharp Service

Our renowned resharp service provides a cost-effective and environment friendly solution for extending the product lifetime.

Scope of Service:

- Cleaning,
- In-depth Inspection,
- Alignment,
- Resharpening,
- Preservation,
- Repackaging.

Guaranteed Same Performance as New Shear Blades

We guarantee that reconditioned Putsch® shear blades deliver the same performance as new blades. Depending on their condition, our Putsch® shear blades can be resharpened up to four times. This can reduce costs by approximately 50% compared to purchasing new shear blades.

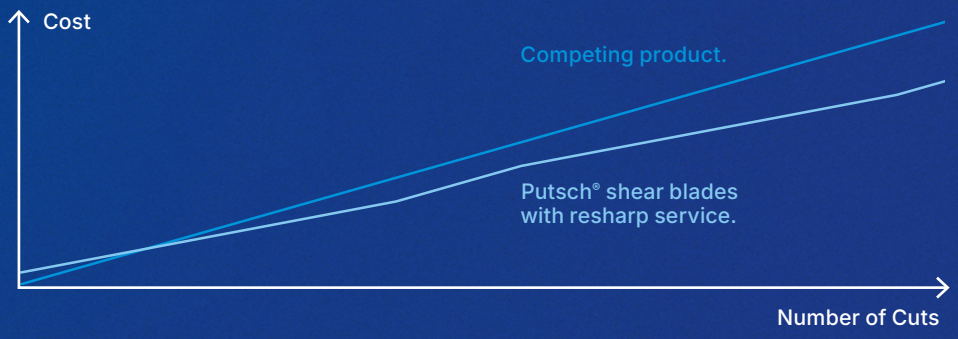

Lower CO_2 Emissions

An internal case study evaluating the CO_2 emissions associated with the production of a shear blade has shown that using our Resharp Service reduces CO_2 emissions by up to 98% compared to manufacturing a new shear blade.



Putsch® Group

Learn More at www.putsch.com



Putsch® GmbH & Co. KG Hagen and Wuppertal	**DE**	+49 2331 399 - 0 glass@putsch.com
Putsch® & Company, Inc. Asheville, NC	**US**	+1 (828) 684 - 0671 info@putschusa.com
Putsch® Nerva S.A. Valladolid	**ES**	+34 983 27 22 08 - 16 info@putschnerva.com
Putsch®Meniconi S.p.A. Poggibonsi	**IT**	+39 0577 9 03 11 info@putschmeniconi.com
Stord® International A.S. Bergen	**NO**	+47 (0) 55 98 40 20 info@stord-internatinal.no
Putsch® Stord s.r.o. Nové Město na Moravě	**CZ**	+420 605 246 767 info@putsch-stord.cz
Putsch® Teknoloji Limited Istanbul	**TR**	+90 (530) 492 24 83 info@putsch.com.tr

Putsch® GmbH & Co. KG
Commercial Register: Amtsgericht (Local Court) Hagen, 3HRA 12
All Rights Reserved. Subject to Change Without Notice. © 2026
1st Edition.