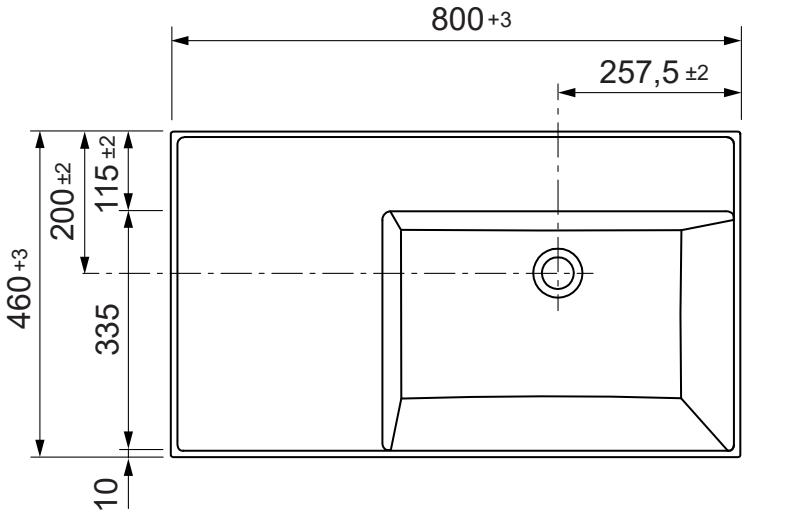
800 +3
257,5 ±2
200 ±2
115 ±2
460 +3
335
10

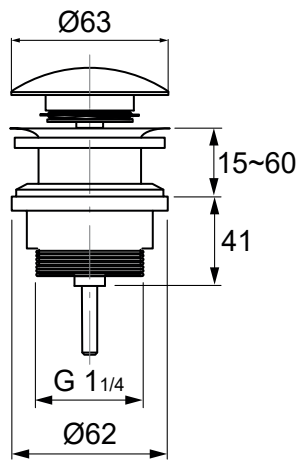
Ø63
15~60
41
G 1 1/4
Ø62

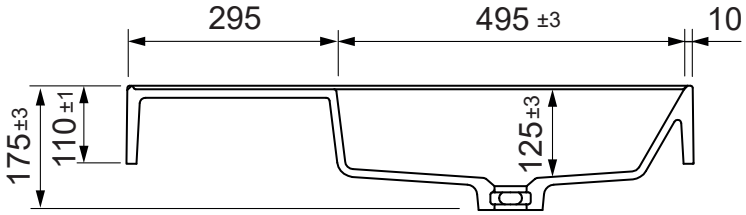
295
495 ±3
10
175 ±3
110 ±1
125 ±3

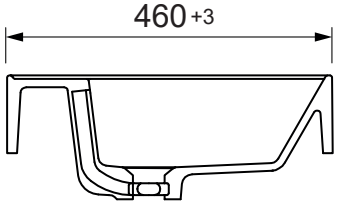
460 +3

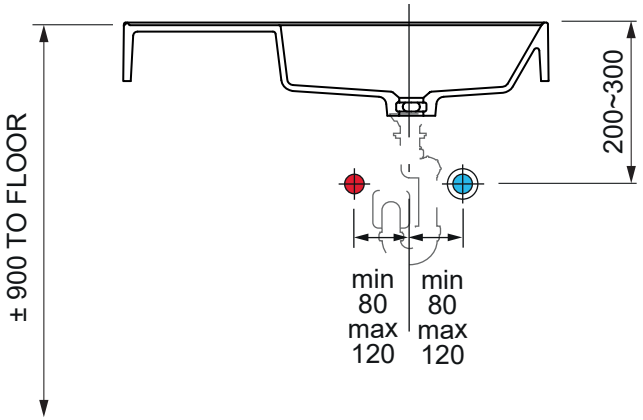
± 900 TO FLOOR
200~300
min
80
max
120
min
80
max
120

(mm)