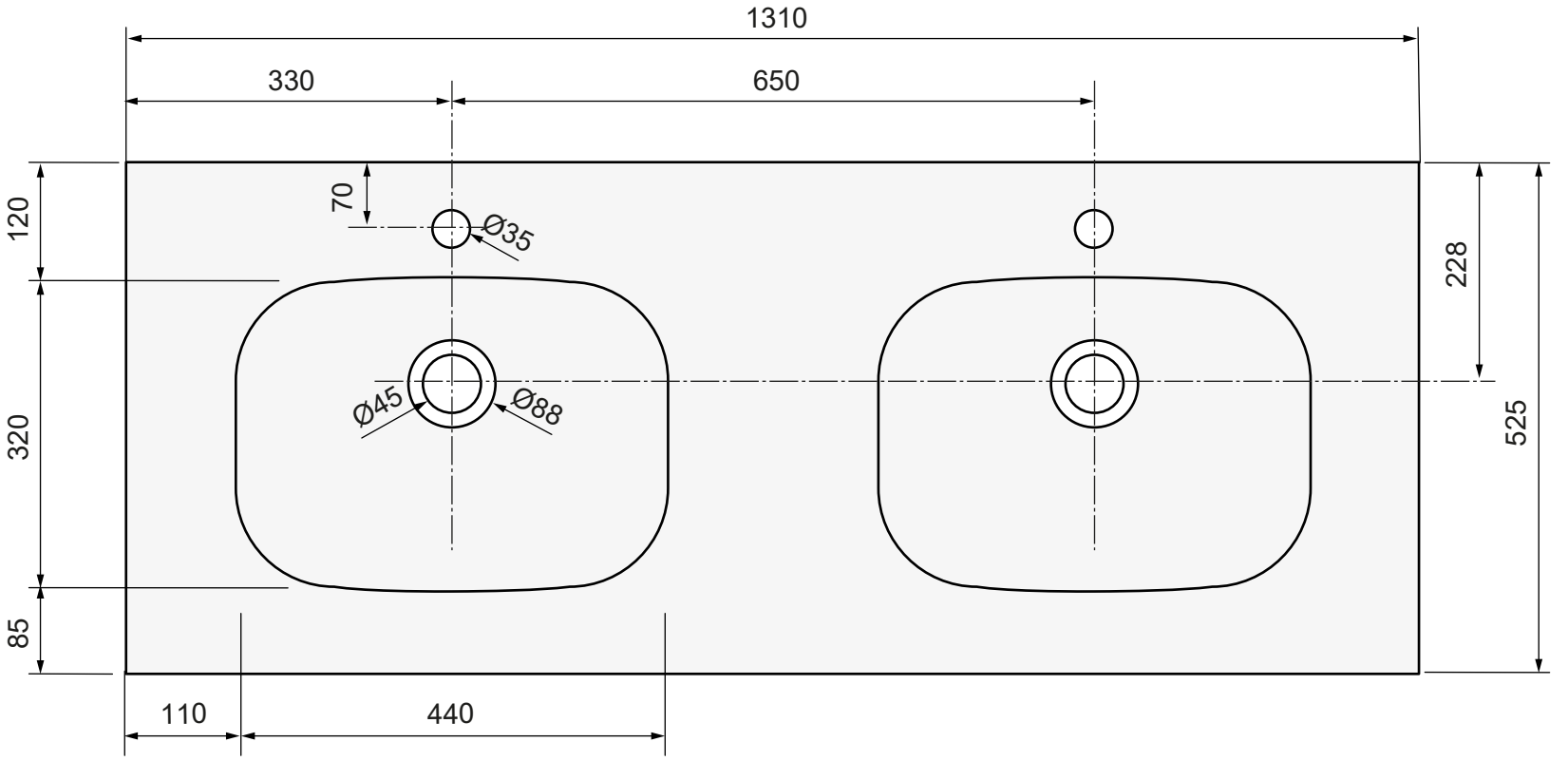

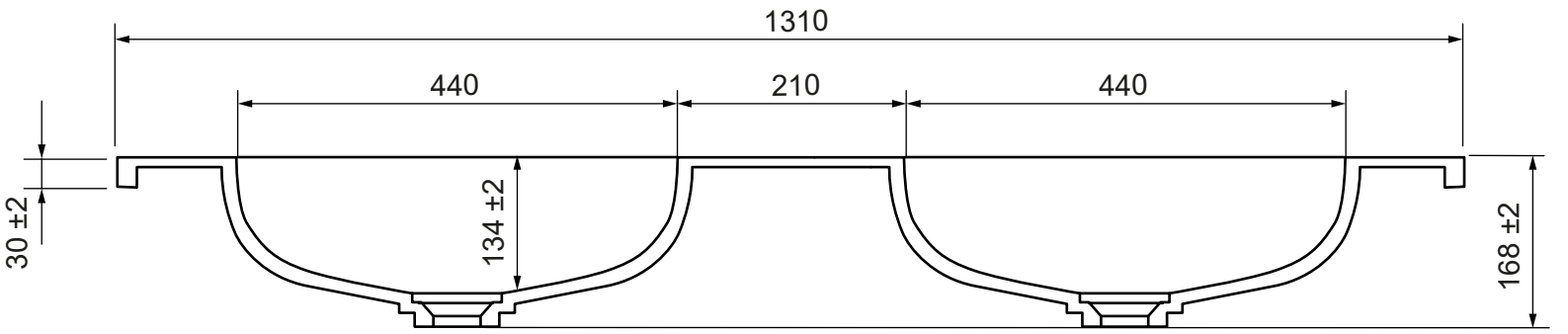

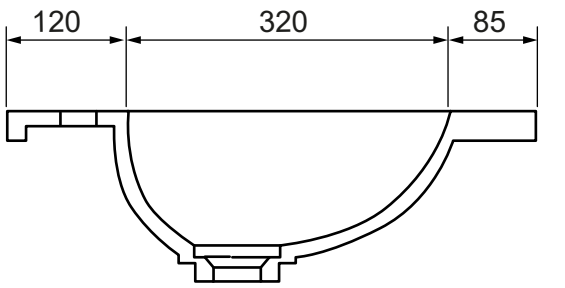

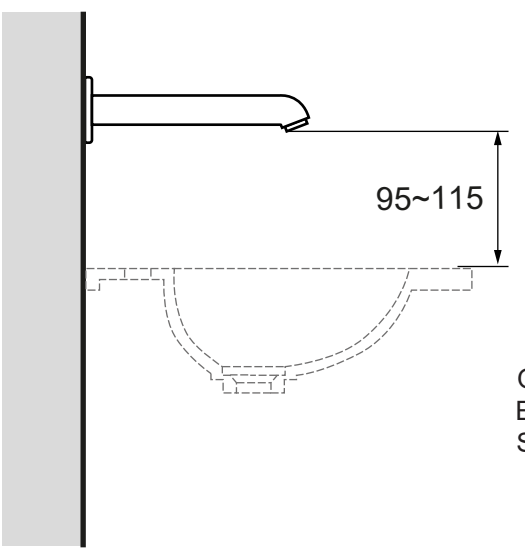

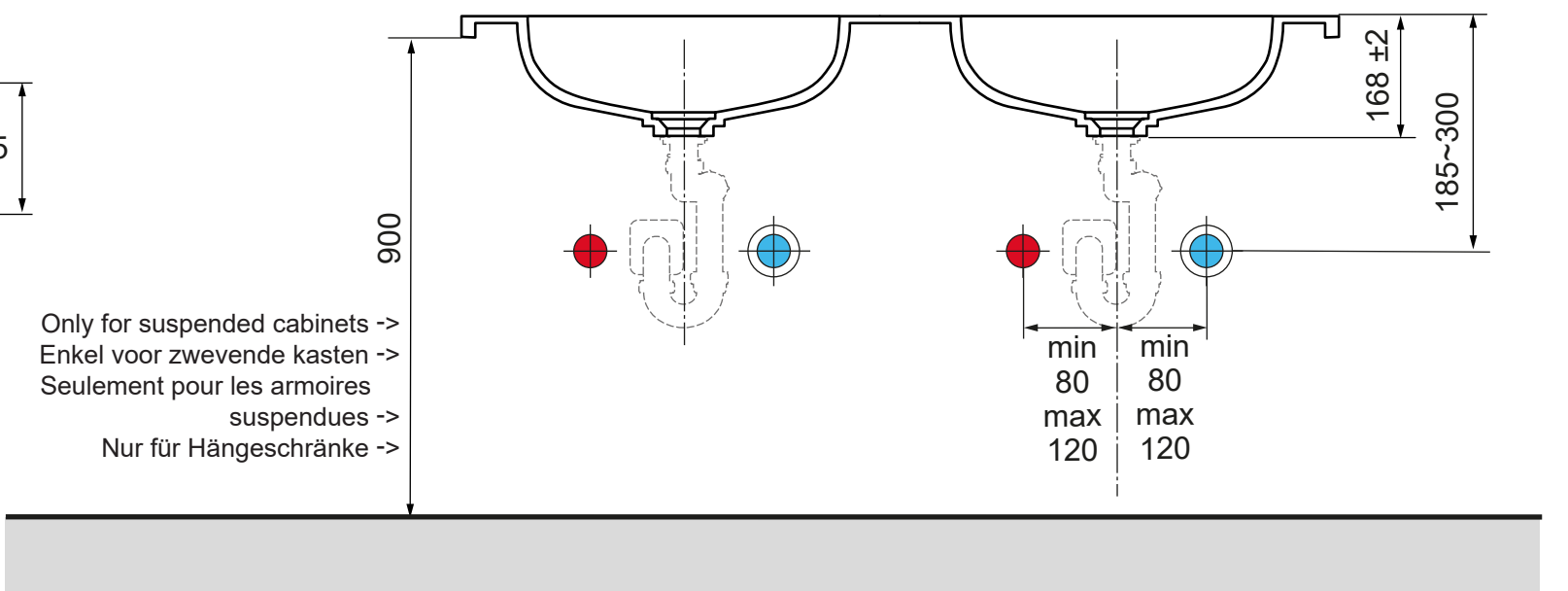

Hot water
Warm water
Eau chaude
Warmes Wasser

Cold water
Koud water
Eau froide
Kaltem Wasser